TRUE BLUE POWER®

A division of Mid-Continent Instrument Co., Inc.

Interface Control Document (ICD) for Status and Data Communication

TBX Series
Advanced Lithium-ion Batteries
Models TB20, TB30, TB40, TB50, TB60

True Blue Power® is a division of Mid-Continent Instrument Co., Inc.

Mid-Continent Instrument Co., Inc.
dba Mid-Continent Instruments and Avionics
9400 E. 34th Street N.
Wichita, KS 67226 USA
ph (800) 821-1212 fx (316) 630-0723

Manual Number TBXICD
Revision 16, September 19, 2025

FOREWORD

This manual provides information intended for use by persons who, in accordance with current regulatory requirements, are qualified to install this equipment. If further information is required, please send inquiries per the contact information below.

We welcome your comments concerning this manual. Although every effort has been made to keep it free of errors, some may occur. When reporting a specific problem, please describe it briefly and include the manual part number, the paragraph/figure/table number and the page number. Send your comments to:

True Blue Power
c/o Mid-Continent Instrument Co., Inc.

9400 E. 34th St. N.
Wichita, KS 67226 USA

Phone : 316-630-0101
Email : tbp@mcico.com

Or visit us on the web at:
www.truebluepowerusa.com

All products produced by Mid-Continent Instrument Co., Inc., including those identified as Mid-Continent Instruments and Avionics or True Blue Power®, are designed and manufactured in Wichita, Kansas, USA.

© Copyright 2019
Mid-Continent Instrument Co., Inc.

REVISION HISTORY

Rev	Date	Detail	Approved
1	05/24/19	Initial draft.	BAW
2	05/29/19	Minor updates. Multiple sections removed that were redundant with the Install Manual.	BAW
3	07/17/19	Engineering Release. No changes.	BAW
4	02/07/20	Added in Diagnostic Data Log information	WVC
5	11/02/20	Corrected the data type and SSM bits for Label 350. (Table 3.2 and 3.4)	BAW
6	12/10/20	Revised Communication Connector Pinout (Table 2.2); updated ARINC Label 352	WVC
7	08/10/21	Skipped revision	WVC
8	01/10/22	Revised ARINC label 352 details; added specific instructions to load customizable parameters and included sample installer.cfg file; added TB60	WVC
9	06/22/22	Revised ARINC Label 352 details	WVC
10	03/17/23	Added ARINC 429 communication speed (Section 3.2.3)	WVC
11	04/11/23	Added ARINC 429 label definitions (Section 3.2.3)	BAW
12	05/16/23	Added Fault/Service indications (Section 3.2.4)	DMG
13	03/28/24	Added new ARINC 429 label information, additional customer programmable configuration parameter and reference to include TB50	WVC
14	07/25/24	Added ARINC Label examples (Section 3.2.3); Added clarification regarding protections (Section 3.2.4)	WVC
15	11/7/2024	Corrected duplicated bits in table 3.15 (discrete bits 14 & 15)	DMG
16	09/19/2025	Revised ARINC labels and fail/fault table (Table 3.19) per Software release 1.2.0; additional customer programmable charge current limit included (Sections 3.3.1 and 3.3.3);	WVC

TABLE OF CONTENTS

FOREWORD **2**

REVISION HISTORY **3**

SECTION 1 GENERAL DESCRIPTION **5**

1.1 INTRODUCTION 5
1.2 PURPOSE 5
1.3 TECHNICAL SPECIFICATIONS 6
1.4 IMPORTANT SAFETY INFORMATION 7
1.4.1 Identification 7
1.4.2 Handling Precautions 7
1.4.3 Additional Precautions 8
1.4.4 Shipping 8

SECTION 2 PHYSICAL AND ELECTRICAL INTERFACE **9**

2.1 ROUTING OF CABLES 9
2.2 INTEGRATION 9
2.3 INSTALLATION 9
2.3.1 Harness Preparation 9
2.3.2 Securing the Unit 12
2.3.3 Vent Installation 13

SECTION 3 COMMUNICATION **14**

3.1 ON-BOARD STATUS INDICATOR 14
3.2 ELECTRICAL DATA 15
3.2.1 Analog Communication Signals 15
3.2.2 Discrete Communication Signals 15
3.2.3 Serial Communication Signals 17
3.2.4 Battery Protections 23
3.2.5 Fault and Service Indications 24
3.3 CONTROL MODE 25
3.3.1 Loading Custom Programmable Parameters 26
3.3.2 Format for Custom Programmable Parameters 27
3.3.3 Custom Programmable Parameter Example 31

SECTION 1 GENERAL DESCRIPTION

1.1 INTRODUCTION

The TB20, TB30, TB40, TB50 and TB60 series of Advanced Lithium-ion Batteries are designed to deliver high current capability to start piston and turbine aircraft engines and subsequently, provide power to the aircraft electrical bus in the event of generator function loss. The five model series are referred to herein as “TBX” collectively to represent commonality between them. Individually, each series is defined by its capacity, 20/30/40/50/60 amp-hours for the TB20/TB30/TB40/TB50/TB60, respectively; with associated parameters such as maximum current also scaling proportionally. However, in most other aspects, the five model series are built on a common platform with common components, perform and communicate identically.

The TBX batteries are sophisticated energy storage and power systems that utilize state-of-the-art Nanophosphate® lithium-ion battery cell technology to optimize performance, safety, life and weight when compared to traditional or competing aircraft batteries. The battery design includes detailed focus on key electrical, mechanical, and software elements that combine to provide exceptional performance and safety that meets and exceeds the latest regulatory and industry standards. The TBX is a complete battery solution that provides significant value and benefit to an aircraft designer, owner and operator.

Key features of the TBX include real-time state of charge and capacity reporting, programmable battery parameters configurable to individual installations, and maintenance-free operation with on-condition end of life. Multiple safety protections, continuous data monitoring, and on-board status indicator also add value, reliability, and reduced cost of ownership for the life of the product.

The TBX requires professional use and maintenance to deliver maximum performance and value as designed. This manual contains information related to the specifications, installation, operation, storage, scheduled maintenance and other related topics associated with the proper care and use of this product.

1.2 PURPOSE

The purpose of this document is to define the communication data that is available for use for the True Blue Power Advanced Lithium-ion Battery series, models TB20, TB30, TB40, TB50 and TB60. Communication data is provided through an 18-pin circular connector on the front of the unit. Data is available in analog, discrete, and ARINC 429 formats.

This document is intended as a supplement to the True Blue Power Installation Manual and Operation Instructions for the TBX series batteries, listed below. An effort has been made to avoid redundant information between the documents, therefore reference to both is required for a comprehensive description of battery interface and operation. The installations manuals will contain the majority of information regarding all other specifications, installation and operation instructions, maintenance, handling, storage, and more.

Model	Installation Manual and Operating Instructions	Outline Drawings
TB20	9020005	6430020
TB30	“	6430030
TB40	“	6430040
TB50	“	6430050
TB60	“	6431060

1.3 TECHNICAL SPECIFICATIONS

See specific model Install Manuals or outline drawings for additional technical specifications.

Physical Characteristics	
Weight and Dimensions	(see Install Manuals or outline drawings)
Quick Disconnect Power Receptacle Communications Connector USB Service Port	2-pin per Mil-PRF-18148/3 form factor (MS3509) 18-pin per MS3114E14-18P USB 2.0, Type-A port
Mounting	Tie rods; see section 2.3.2

Table 1.1

Functional Performance	
Certification	FAA TSO-C179b, Class A-4B
Performance Qualification	RTCA/DO-311A *Minimum Operational Performance Standard for Rechargeable Lithium Batteries and Battery Systems*
Environmental Qualification	RTCA/DO-160G (see Appendix 1, Install Manuals for Sections and Categories)
Software / Complex Hardware	RTCA/DO-178C, Design Assurance Level (DAL) A
Power Input	28.8 volts DC Nominal
Power Output	26.4 volts DC Nominal
Battery Capacity (Beginning of Life)	TB20: 20 amp hours (Ah) @ 23°C TB30: 30 amp hours (Ah) @ 23°C TB40: 40 amp hours (Ah) @ 23°C TB50: 50 amp hours (Ah) @ 23°C TB60: 60 amp hours (Ah) @ 23°C

Table 1.2

1.4 IMPORTANT SAFETY INFORMATION

Read this safety information BEFORE maintaining or servicing the battery pack.

1.4.1 Identification

This section describes the precautions necessary for safe operation. The following safety symbols have been placed throughout the guide.

WARNING

Warnings identify conditions or practices that could result in personal injury.

CAUTION

Cautions identify conditions or practices that could result in damage to the equipment.

1.4.2 Handling Precautions

WARNING

The battery pack's energy is high enough to sustain a possible ARC flash. Always wear safety glasses, fire retardant smocks and use insulated tools when servicing the battery pack.

- Remove metal items such as rings, bracelets, and watches when working with battery packs. A battery could produce a short circuit current high enough to weld jewelry to metal and cause a severe burn.
- Always use appropriate Electrostatic Discharge (ESD) protection while working with the battery pack.
- All connections for battery pack testing must include appropriate short-circuit protection.
- The battery pack service area shall be properly ventilated and egress paths shall be unobstructed.
- Specialized breathing filters are not required under normal use.
- Always use electrically insulated tools.
- Never smoke or allow a spark or flame near the battery pack.
- Use caution to reduce the risk of dropping a metal tool on the battery. Dropping a tool could spark or short circuit the battery pack.
- Turn all accessories off before removing the ground terminal.

1.4.3 Additional Precautions

The following design and operation factors are required for safe use.

CAUTION

- It is not acceptable to combine or use any battery cells or modules other than those approved by True Blue Power within this battery pack.
- There are no limitations in storing or using this battery in the vicinity of other battery chemistries. This battery does not emit or absorb any gas during storage, transportation or during normal operating conditions.
- Batteries must not be installed with the output terminals reversed. A reversed battery could be charged by other batteries in the circuit during discharge; or discharged by the charging system during charge.
- Battery terminals should be covered with non-conductive protective devices to avoid any possibility of shorting during handling, shipping or storage. NEVER connect the two terminals of the battery together with a direct electrical connection.

1.4.4 Shipping

True Blue Power lithium-ion cells and batteries are designed to comply with all applicable shipping regulations as prescribed by industry and regulatory standards. This includes compliance with the UN recommendations on the Transport of Dangerous Goods, IATA Dangerous Goods Regulations, applicable U.S. DOT regulations for the safe transport of lithium-ion batteries, and the International Maritime Dangerous Goods Code. In accordance with IATA and per UN 3480, PI 965, Section 1A and 1B, when shipped by air, the True Blue Power Advanced Lithium-ion Battery will be shipped with a state of charge (SOC) not to exceed 30% of rated capacity. This battery is classified as a Class 9 Dangerous Good. If the battery requires shipment, please contact the manufacturer for additional instructions on proper procedures.

CAUTION

The unit is shipped at approximately 30% state of charge (SOC). Upon receipt, the battery MUST be fully charged using the procedures listed in this manual (prior to storage and again prior to installation/use).

Upon receipt the battery shall be fully charged. Batteries that are stored thereafter shall be fully recharged at a minimum every six (6) months, following the procedure set forth in Section 5.2.2. For more detailed storage instructions refer to Section 5.4.

SECTION 2 PHYSICAL AND ELECTRICAL INTERFACE

2.1 ROUTING OF CABLES

The power terminal wires associated with the unit are heavy gauge wire and carry significant power. Be aware of routing cables near other electronics or with other wire bundles that may be susceptible to high energy flow.

Avoid sharp bends in both the power cables and the signal cabling and be cautious of routing near aircraft control cables. Also avoid proximity and contact with aircraft structures, avionics equipment, or other obstructions that could chafe wires during flight and cause undesirable effects. Cables should not run adjacent to heaters, engine exhausts, or other heat sources. The signal cable bundle wires are recommended to be no smaller than 24 gauge.

2.2 INTEGRATION

Consideration should be given to how the status and reporting functions of the battery will be displayed within the aircraft. At a minimum, critical parameters determined at the time of certification should be available to the pilot and/or crew. Additionally, existing aircraft systems which are designed to work with traditional batteries may need alteration in order to accommodate the slight change in voltage output of this lithium-ion battery and the communication capabilities available.

2.3 INSTALLATION

WARNING

DO NOT SHORT TERMINALS AT ANY TIME!

Extreme care and caution should be applied when handling and connecting to the unit. Danger of short circuit and subsequent arc flash, electrical burns or equipment damage can occur if not handled properly.

Install the battery in the aircraft in accordance with the aircraft manufacturer's instructions and the following sections.

2.3.1 Harness Preparation

Prepare aircraft wiring with mating connectors in accordance with the proper Wire Size and Type (Table 2.1), Connection Features (Figure 2.1) and Pin Identification Diagrams (Figure 2.2 , Figure 3.3, Table 2.2).

Use of PTFE, ETFE, TFE, Teflon or Tefzel insulated wire is recommended for aircraft use. Recommended wire sizes and types are identified in Table 2.1 below. *Note: Wire gauge size for power connections is dependent on the particular aircraft installation, taking into consideration cable length, load profile, etc.

Wire Size and Type			
Wire Gauge	Wire Type	Connector	Pins
000 AWG *	Stranded Copper	Power	+/-
18-24 AWG	Stranded Copper	Comm (18-pin)	A-U

Table 2.1
Wire Size and Type

The ¼ -20 threaded grounding lug maximum torque is 40 in-lbs (4.5Nm).

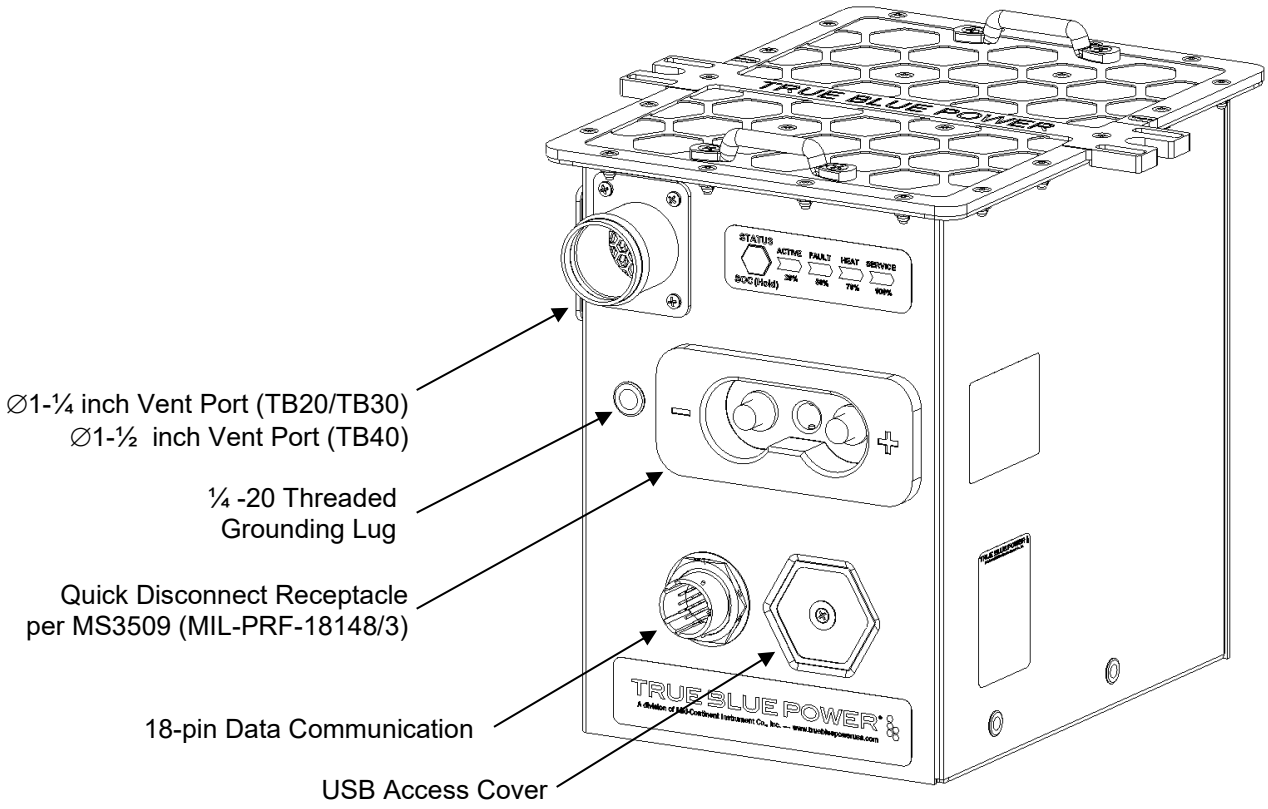

Figure 2.1
Physical Interface Descriptions
(TB20 shown)

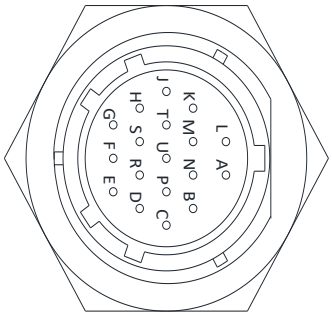

Figure 2.2
Communication Connector

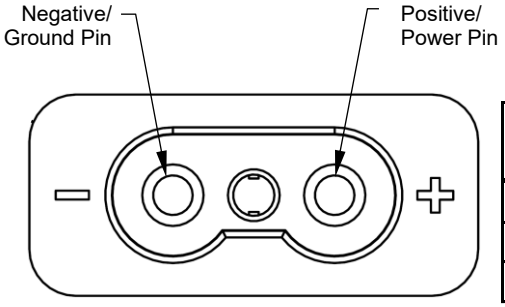

Power Receptacle (2-pin)	
Pin	Pin Function
+	28VDC power in
-	aircraft ground

Figure 2.3
Power Connector

Communication Connector (18-pin)	
Pin	**Description**
A	Analog SOC
B	Battery Disable Input
C	Heater Disable Input
D	RTD-1A
E	RTD-1B
F	RTD-2A
G	RTD-2B
H	ARINC 429 (A)
J	Service Discrete
K	Fault Discrete
L	Heating Discrete
M	Minimum SOC Discrete
N	Analog Ground
P	Charge Limit / BMS Ref *
R	Battery Identifier
S	ARINC Shield
T	Engine Start Discrete
U	ARINC 429 (B)

Table 2.2
Communication Connector Pinout

* Note: Charge Limit input feature for Communication Connector pin P requires MOD 3 or later. For all batteries with part number ending in -2, pin P is a BMS ground reference. This does not apply to TBX battery -1 models (e.g. 6430020-1, 6430030-1, 6430040-1, 6430050-1, 6431060-1).

2.3.2 Securing the Unit

The battery is designed to be secured in the aircraft using hold-down rods. The hold-down features are integrated into the lid of the battery. The hold-down consists of a slot for the hold-down rod, open to the outboard sides, and two perpendicular slots on each side to keep the rod vertical using an alignment washer. The battery is then secured with the appropriate nut or hardware designed to mate with the rod. Tighten the nut or equivalent to approximately 20 in-lbs (2.5 Nm) on TB20 and TB30 units; 25 in-lbs on TB40, TB50 and TB60 units. Dimensions in the figure below apply to all units, unless specified.

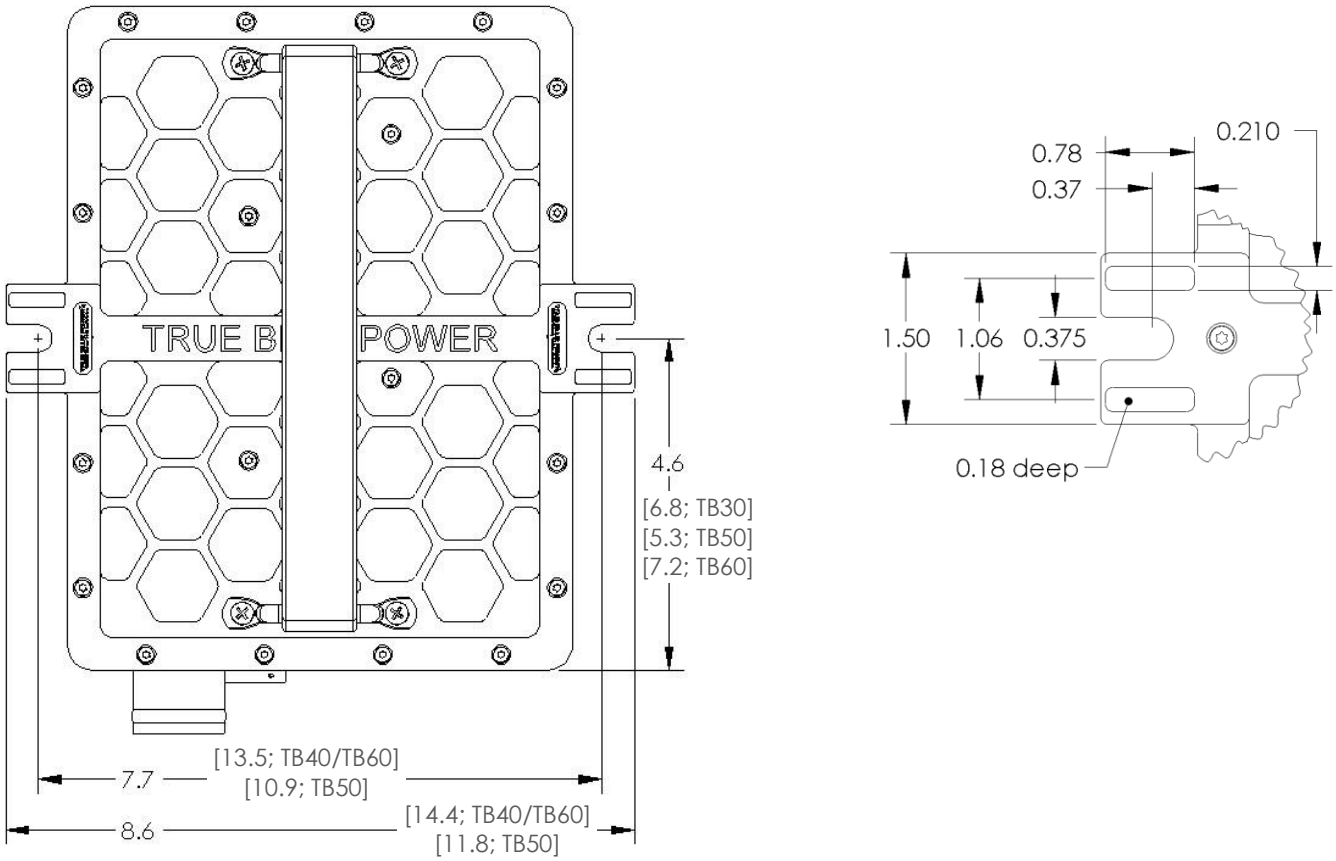

Figure 2.4
Hold-Down Mounting Features

2.3.3 Vent Installation

It is recommended that the battery be operated with the vent tube in place when installed in the aircraft. The vent port is 1.25 inches in diameter (for TB20 and TB30) and 1.5 inches in diameter (for TB40, TB50 and TB60). The vent tube has a protrusion just inboard around the outside diameter to help prevent any disengagement of the attached vent tube.

There are two possible locations for the vent port to be configured. The default position is on the front face of the unit in the upper left corner. The alternate location is on the left side of the unit in the upper right corner. For the TB40, TB50 and TB60 units, the alternate location is on top of the battery. Both locations are eligible for certified installation. If the alternate location is desired, simply remove the four screws and vent port from its original location, remove the four screws and blanking plate from the alternate location, switch the positions and reinstall. Visually verify that the silicone gasket between the port or plate and the case fully covers the holes in the case and has not squeezed completely out from under either part. Screw torque applied should be approximately 5.5 in-lbs. See Figure 2.5 for a diagram of the vent and blanking plate assembly.

A Vent Kit is available that includes a high temperature vent hose and hose attachment hardware. Contact True Blue Power for potential alternatives. The vent tube should be properly and securely attached to an aircraft exit point which would allow any gaseous emissions to be vented overboard. The battery produces no emissions during normal operation; emissions will only be present in the event of a battery failure. Be sure to locate the vent where emitted gases would not be directed toward any of the aircraft's air intake points.

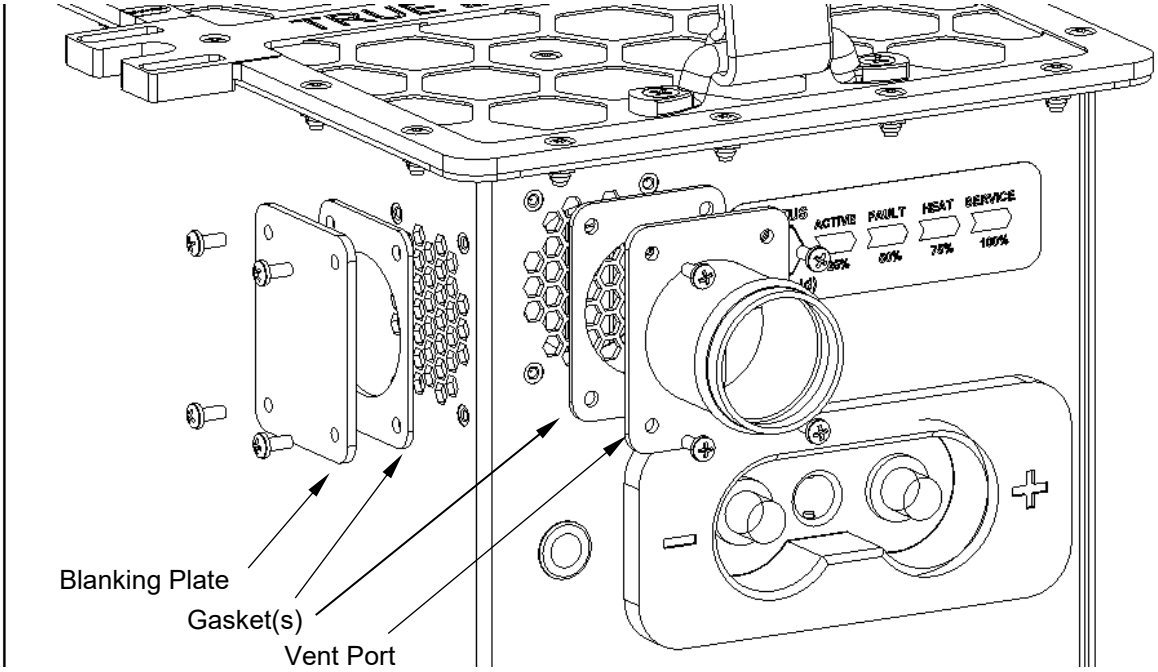

Figure 2.5
Vent Location Options
(TB20/TB30 Shown)

SECTION 3 COMMUNICATION

3.1 ON-BOARD STATUS INDICATOR

The battery has a built-in/on-board status indicator incorporated into the front face of the battery. The on-board Status Indicator can provide visual communication of active or on-demand health status and state of charge. It can also be used to manually transition the battery from Sleep Mode to Active Mode by pressing the STATUS button. This can be used to check status, state of charge, or to initiate the heaters to pre-heat the battery (if the battery is cold).

When the battery is in Active Mode, status is continuously displayed. Status is listed as one or more of four states as listed below. For each state, a lighted chevron will appear under the associated label on the Status Indicator. Note that the gray chevrons in Figure 3.1 are not visible (black) on the Status Indicator until a lighted annunciator segment is active.

- Active — Solid Green indicator: Battery is Active.
  Flashing Green indicator: Battery is in Pre-Heat Cycle.
- Fault — Solid Yellow indicator: Battery has an internal fault. A fault is also communicated through both the discrete fault signal and via ARINC. See Section 4.4.3 for further description.
- Heat — Flashing White indicator: Battery heaters are currently heating.
  Solid Yellow indicator: Heater is disabled.
- Service — Solid Red indicator: Battery has a permanent fault. A service fault is also communicated through both the discrete service signal and via ARINC. See Section 4.4.3 for further description.

The Status Indicator can also provide on-demand state of charge. By temporarily pressing and holding the STATUS/SOC button, the chevrons will quickly cycle in blue, indicating a change to state of charge indication. The Status Indicator can display nine different state of charge ranges as described below.

State of Charge	Indicator 1 “25%”	Indicator 2 “50%”	Indicator 3 “75%”	Indicator 4 “100%”
0 - 10 %	Flash Yellow	Off	Off	Off
10 - 15 %	Dim Green	Off	Off	Off
15 - 25 %	Solid Green	Off	Off	Off
25 - 40 %	Solid Green	Dim Green	Off	Off
40 - 50 %	Solid Green	Solid Green	Off	Off
50 - 65 %	Solid Green	Solid Green	Dim Green	Off
65 - 75 %	Solid Green	Solid Green	Solid Green	Off
75 - 90 %	Solid Green	Solid Green	Solid Green	Dim Green
90 - 100 %	Solid Green	Solid Green	Solid Green	Solid Green

Table 3.1
State of Charge Indication

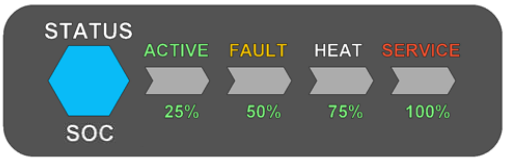

Figure 3.1
On-Board Status Indicator

3.2 ELECTRICAL DATA

When in Active Mode, the Advanced Lithium-ion Battery presents multiple status indications and data to the aircraft for display and monitoring on appropriate systems. These are supplied as either serial, discrete, or analog signals. The various outputs and their definition are supplied below. Locations and descriptions of each pin of the 18-pin Communications connector are listed in Figure 2.2, Figure 2.3 Table 2.2.

3.2.1 Analog Communication Signals

The battery provides two pieces of data via analog outputs. These are temperature data from the dual, independent RTDs and analog state of charge.

Each RTD has a resistance of 100 ohms at 0°C. Resistance (ohms) for all temperatures (t, in degrees Celsius) can be calculated using the following formula(s):

(per specification) Resistance = 100 x [1 + (0.00390833 x T) + (0.00000057753 x T^2)]
(linear approximation) Resistance = (0.3781 x T) + 100.24
(temp from resistance) Temperature = (R – 100.24) / 0.3781

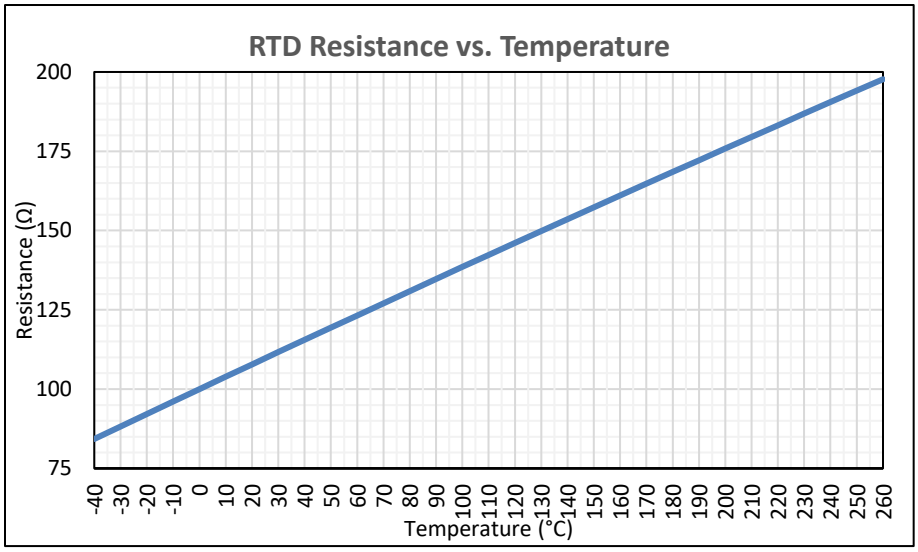

Figure 3.2
RTD Resistance vs. Temperature

The battery also provides the state of charge as an analog output. The state of charge of the battery is represented from 0 to 100% as 0 to 5VDC. This signal can be used to drive either a digital or mechanical indication of the state of charge in lieu of the serial communication signals if preferred. The voltage reference is between Pin A (‘Analog SOC’) and Pin N (‘Analog Ground’).

3.2.2 Discrete Communication Signals

Discrete signals are available to provide both basic battery status and simplified indication of battery readiness specific to the aircraft’s requirements. In some cases, where serial data cannot be integrated with the aircraft’s avionics or other messaging systems, the discrete battery status signals can be used to meet minimum regulatory annunciation requirements for lithium batteries.

Each discrete output is normally open (NO) and provides an active low/ground when the condition is true as described below. The circuit consists of a MOSFET connected to the battery negative (ground) with a series resistance of 60Ω. Each pin is current limited to 50 mA.

- Heating: Active when the Heater is providing heat.
- Fault: Active when the battery has an internal fault. Internal faults may be temporary and may result in partial or fully degraded functionality. Fault may clear with time or upon next usage. Verify battery health and availability by cross-checking other parameters (voltage, state of charge, etc.)
- Service: Active when the battery has a permanent fault. Service faults may result in partial or fully degraded function. Verify battery health and availability by cross-checking other parameters (voltage, capacity, state of charge, etc.) Battery should be submitted for service in accordance with the aircraft's flight manual supplement.
- Minimum SOC: Active when the battery has determined that its state of charge is BELOW the value programmed according to the aircraft's customizable configuration parameters. Equivalent ARINC bit description is "SOC LOW".
- Engine Start: Active when the battery has determined that its available energy is NOT sufficient to fully complete an engine start. The requirements to complete an engine start must be programmed according to the aircraft's customizable configuration parameters. Equivalent ARINC bit description is "START UNAVAILABLE".

There are three discrete inputs as described below. All are normally open and are required to be grounded to activate their function.

- Battery Disable: This input, when grounded, manually and fully disables the battery, including power and communication.
- Heater Disable: This input, when grounded, manually disables the heaters from operating.
- Charge Current Limit: This input when grounded, switches charge limiting from Setpoint 1 to Setpoint 2.

3.2.3 Serial Communication Signals

The battery generates a sophisticated array of situational status and data available for real-time reporting and awareness. This is provided to the aircraft in the form of serial data using the ARINC 429 protocol at low speed (12.5kHz). Below is the definition of the data the battery provides.

ARINC 429 Label Definition									
Label	Parameter Name	Data Type	Range	Units	Sig Bits	Pos Sense	Resolution	Min Transmit Interval (ms)	Max Transmit Interval (ms)
271	Battery Discrete Outputs	DISCRETE	-	-	-	-	-	250	500
340	DC Current	BNR	± 4096	A	15	Discharge	0.125	250	500
341	DC Voltage	BNR	64	V	15	-	0.001953	250	500
342	Battery Temperature	BNR	± 512	C	12	-	0.125	1000	2000
343	Deliverable Energy	BNR	512	Ah	13	-	0.0625	1000	2000
344	Capacity	BNR	512	Ah	13	-	0.0625	1000	2000
345	State of Charge	BNR	128	%	11	-	0.0625	1000	2000
346	Estimated Life Remaining	BNR	128	%	11	-	0.0625	1000	2000
350	Software Version	DISCRETE	X.YY.ZZ	-	-	-	-	1000	2000
351	Operational Status	DISCRETE	-	-	-	-	-	500	1000
352	Fault Status	DISCRETE	-	-	-	-	-	500	1000
353	Configuration ID	BNR	65536	-	16	-	-	1000	2000
377	Equipment ID	DISCRETE	-	-	-	-	-	1000	2000

Note: Labels 272, 273, 277, 301, 304, 305, 312, 315, and 316 are available as duplicated values within the table, but with legacy formats. See manufacturer for details.

Table 3.2
ARINC Label Format

- Battery Discretes — Provides equivalent serial representation of the previously defined Discrete Communication Signals described in section 3.2.2.
- DC Current — Amperage being supplied (discharge (+)) or accepted (charging (-))
- DC Voltage — Voltage at the battery terminals
- Battery Temp — Internal temperature of the battery (°C)
- Deliverable Energy — Amount of energy the battery can currently deliver at a 1C rate. Deliverable Energy is defined as State of Charge (%) x Current Maximum Capacity.
  - Example: A TB20 has aged and its current maximum capacity is 18Ah, instead of its original beginning-of-life 20Ah. If its current State of Charge is 80%, then:
    Deliverable Energy = 80% x 18Ah = 14.4Ah
- Capacity — Current maximum capacity of the battery. This is the real-time tracking of the battery's capacity that decreases over time with age and use.
- State of Charge — Total amount of charge the battery has, in relation to its capacity (%)
- Life Remaining — Percent of capacity left before the battery's capacity reaches the programmed End of Life.
  - Example: A TB20 has been programmed for End of Life of 15Ah for a given aircraft. The current capacity, due to aging, is now 18Ah. Then:
    Life Remaining = (18Ah – 15Ah) / (20Ah – 15Ah) = 3 / 5 = 60%
- Software Version — Loaded software version presented as X.YY.ZZ (Example: 1.01.01)
- Operational Status — Provides nine discrete states: Charging, Charge Limiting, Discharging, Heating
- Fault Status — Provides discrete indication of any active faults (see next page)
- Equipment ID — ARINC defined equipment identifier: 3B0

Label 271 Battery Discrete Outputs

The following discrete outputs are configured as follows:

ARINC 429 Label 271 - Battery Discrete Outputs			
Bit	Condition	State	
		0	1
11	OK	Not OK	OK
12	ENGINE START AVAILABLE	Available	Not Available
13	HEATING	Off	On
14	SOC GOOD	Good	Not Good
15	FAULT	No Fault	Fault
16	BATTERY HEATER DISABLE	Enabled	Disabled
17	SERVICE	Not Required	Required
18	MINIMUM ENERGY LOW	Good	Not Good

Table 3.3
Discrete Status Bit Definition for Label 271

In this example, the battery is operating normally (OK = 1) with none of the other discrete items active:

ARINC 429 Label 271 - Battery Discrete Outputs																															
32	31	30	29	28	27	26	25	24	23	22	21	20	19	18	17	16	15	14	13	12	11	10	9	8	7	6	5	4	3	2	1
Parity	SSM		Data Field																			SDI		Label (271)							
			Padding											Min Energy Low	Service	Batt Htr Disable	Fault	SOC Good	Heating	Eng Start Avail	Ok			1			7			2	
1	0	0	0	0	0	0	0	0	0	0	0	0	0	0	0	0	0	0	0	0	1	0	0	1	0	0	1	1	1	0	1

Table 3.4
ARINC 429 Label 271 Example

Label 340 DC Current

In these examples, the battery reports 74.375 Amps positive (discharge) current (first example) and -30.125 Amps negative (charge) current (second example) where we suspect a misleading current value (SSM bits are 0,0):

ARINC 429 Label 340 - DC Current																															
32	31	30	29	28	27	26	25	24	23	22	21	20	19	18	17	16	15	14	13	12	11	10	9	8	7	6	5	4	3	2	1
Parity	SSM		Data Field																			SDI		Label (340)							
			Sign	2048	1024	512	256	128	64	32	16	8	4	2	1	0.5	0.25	0.125	Padding					0			4			3	
1	1	1	0	0	0	0	0	0	1	0	0	1	0	1	0	0	1	1	0	0	0	0	0	0	0	0	0	0	1	1	1
0	0	0	1	1	1	1	1	1	1	1	0	0	0	0	1	1	1	1	0	0	0	0	0	0	0	0	0	0	1	1	1

Table 3.5
ARINC 429 Label 340 Example

Label 341 DC Voltage

In this example, the battery reports a DC Voltage of 28.752 VDC:

ARINC 429 Label 341 - DC Voltage																															
32	31	30	29	28	27	26	25	24	23	22	21	20	19	18	17	16	15	14	13	12	11	10	9	8	7	6	5	4	3	2	1
Parity	SSM		Data Field																			SDI		Label (341)							
			Sign	32	16	8	4	2	1	0.5	0.25	0.125	0.0625	0.0313	0.0156	0.00781	0.00391	0.00195	Padding					1			4			3	
1	1	1	0	0	1	1	1	0	0	1	1	0	0	0	0	0	0	1	0	0	0	0	0	1	0	0	0	0	1	1	1

Table 3.6
ARINC 429 Label 341 Example

Label 342 Battery Temperature

In these examples, the battery reports a temperature of 23°C (first example) and -7°C (second example):

ARINC 429 Label 342 - Battery Temperature (°C)																															
32	31	30	29	28	27	26	25	24	23	22	21	20	19	18	17	16	15	14	13	12	11	10	9	8	7	6	5	4	3	2	1
Parity	SSM		Data Field																			SDI		Label (342)							
			Sign	256	128	64	32	16	8	4	2	1	0.5	0.25	0.125	Padding								2			4			3	
1	1	1	0	0	0	0	0	1	0	1	1	1	0	0	0	0	0	0	0	0	0	0	0	0	1	0	0	0	1	1	1
1	1	1	1	1	1	1	1	1	1	0	0	1	0	0	0	0	0	0	0	0	0	0	0	0	1	0	0	0	1	1	1

Table 3.7
ARINC 429 Label 342 Example

Label 343 Deliverable Energy

In this example, the battery reports deliverable energy of 19.5Ah:

ARINC 429 Label 343 - Deliverable Energy (Ah)																															
32	31	30	29	28	27	26	25	24	23	22	21	20	19	18	17	16	15	14	13	12	11	10	9	8	7	6	5	4	3	2	1
Parity	SSM		Data Field																			SDI		Label (343)							
			Sign	256	128	64	32	16	8	4	2	1	0.5	0.25	0.125	0.063	Padding							3			4			3	
1	1	1	0	0	0	0	0	1	0	0	1	0	1	0	0	0	0	0	0	0	0	0	0	1	1	0	0	0	1	1	1

Table 3.8
ARINC 429 Label 343 Example

Label 344 Capacity

In this example, the battery reports 38.75Ah capacity:

ARINC 429 Label 344 - Capacity (Ah)																															
32	31	30	29	28	27	26	25	24	23	22	21	20	19	18	17	16	15	14	13	12	11	10	9	8	7	6	5	4	3	2	1
Parity	SSM		Data Field																			SDI		Label (344)							
			Sign	256	128	64	32	16	8	4	2	1	0.5	0.25	0.125	0.063	Padding							4			4			3	
0	1	1	0	0	0	0	1	0	0	1	1	0	1	1	0	0	0	0	0	0	0	0	0	0	0	1	0	0	1	1	1

Table 3.9
ARINC 429 Label 344 Example

Label 345 State of Charge

In this example, the battery reports 88.5% SOC:

ARINC 429 Label 345 - State of Charge (%)																															
32	31	30	29	28	27	26	25	24	23	22	21	20	19	18	17	16	15	14	13	12	11	10	9	8	7	6	5	4	3	2	1
Parity	SSM		Data Field																			SDI		Label (345)							
			Sign	64	32	16	8	4	2	1	0.5	0.25	0.125	0.063	Padding									5			4			3	
0	1	1	0	1	0	1	1	0	0	0	1	0	0	0	0	0	0	0	0	0	0	0	0	1	0	1	0	0	1	1	1

Table 3.10
ARINC 429 Label 345 Example

Label 346 Estimated Life Remaining

In this example, the battery indicates 81% estimated life remaining:

ARINC 429 Label 346 - Estimated Life Remaining (%)																															
32	31	30	29	28	27	26	25	24	23	22	21	20	19	18	17	16	15	14	13	12	11	10	9	8	7	6	5	4	3	2	1
Parity	SSM		Data Field																			SDI		Label (346)							
			Sign	64	32	16	8	4	2	1	0.5	0.25	0.125	0.063	Padding									6			4			3	
1	1	1	0	1	0	1	0	0	0	1	0	0	0	0	0	0	0	0	0	0	0	0	0	0	1	1	0	0	1	1	1

Table 3.11
ARINC 429 Label 346 Example

Label 350 Software Version

In this example, the battery indicates software version 1.1.1:

ARINC 429 Label 350 -Software Version																															
32	31	30	29	28	27	26	25	24	23	22	21	20	19	18	17	16	15	14	13	12	11	10	9	8	7	6	5	4	3	2	1
Parity	SSM		Hardware Version			Major Version								Minor Version								SDI		Label (350)							
			4	2	1	128	64	32	16	8	4	2	1	128	64	32	16	8	4	2	1			0			5			3	
0	0	0	0	0	1	0	0	0	0	0	0	0	1	0	0	0	0	0	0	0	1	0	0	0	0	0	1	0	1	1	1

Table 3.12
ARINC 429 Label 350 Example

Label 351 Operational Status

The discrete bits are defined as follows:

ARINC 429 Label 351 – Operational Status			
Bit	Condition	State	
		0	1
11	CHARGING	Not Charging	Charging
12	CHARGE LIMITING	Not Engaged	Engaged
13	DISCHARGING	Not Discharging	Discharging
14	HEATER CYCLE ACTIVE	Heater Cycle Off	Heater Cycle On
15	MODULE DISCHARGE DISABLED	All Modules Can Discharge	1+ Modules Discharge Disabled
16	BATTERY DISCHARGE DISABLED	1+ Modules Can Discharge	Battery Discharge Disabled
17	MODULE CHARGE DISABLED	All Modules Can Charge	1+ Modules Charge Disabled
18	BATTERY CHARGE DISABLED	1+ Modules Can Charge	Battery Charge Disabled
19	CHARGE LIMIT SETPOINT	Charge Limit Setpoint 1	Charge Limit Setpoint 2

Table 3.14
Operational Status Bit Definition for Label 351

In these examples, battery operational status is charging (first example), Module Discharge Disabled (second example), Battery Charge Disabled (third example):and module charge disabled (second example):

ARINC 429 Label 351 – Operational Status																															
32	31	30	29	28	27	26	25	24	23	22	21	20	19	18	17	16	15	14	13	12	11	10	9	8	7	6	5	4	3	2	1
Parity	SSM		Data Field																			SDI		Label (351)							
			Padding										Chg Limit Setpoint	Batt Chg Disable	Mod Chg Disable	Batt D/C Disable	Mod D/C Disable	Htr Cycle Active	Discharging	Charge Limit	Charging			1			5			3	
1	0	0	0	0	0	0	0	0	0	0	0	0	0	0	0	0	0	0	0	0	1	0	0	1	0	0	1	0	1	1	1
1	0	0	0	0	0	0	0	0	0	0	0	0	0	0	0	0	1	0	0	0	0	0	0	1	0	0	1	0	1	1	1
0	0	0	0	0	0	0	0	0	0	0	0	0	0	1	1	0	0	0	0	0	0	0	0	1	0	0	1	0	1	1	1

Table 3.14
ARINC 429 Label 351 Example

Label 352 Fault Status

The discrete bits are defined as follows:

ARINC 429 Label 352 – Fault Status			
Bit	Condition	State	
		0	1
11	INVALID CONFIGURATION	Valid	Invalid
12	STACK OVER VOLTAGE	Normal	Over Voltage
13	CELL OVER VOLTAGE	Normal	Over Voltage
14	CHARGE CELL OVER TEMP	Normal	Over Temp
15	OVER CURRENT	Normal	Over Current
16	SHORT CIRCUIT	Normal	Short Circuit
17	CELL UNDER VOLTAGE	Normal	Under Voltage
18	STACK UNDER VOLTAGE	Normal	Under Voltage
19	DISCHARGE CELL OVER TEMP	Normal	Over Temp
20	FET OVER TEMP	Normal	Over Temp
21	CONTINUOUS BIT FAULT	Normal	Fault
22	CONTINUOUS BIT FAILURE	Normal	Failure
23	END OF LIFE	Normal	End of Life
24	OVER DISCHARGE	Normal	Over Discharge
25	HEATER FAULT	Normal	Fault
26	HEATER FAIL	Normal	Fail
27	MODULE CHARGE REQUIRED	Normal	Recharge
28	CELL IMBALANCE FAIL	Normal	Fail
29	CELL OVER TEMPERATURE FAIL	Normal	Fail

Table 3.15
Fault Status Bit Definition for Label 352
(see 3.2.5 for Fault Status relationship to discrete outputs)

In this example, fault status indicates charge cell over temperature fault:

ARINC 429 Label 352 -Fault Status																															
32	31	30	29	28	27	26	25	24	23	22	21	20	19	18	17	16	15	14	13	12	11	10	9	8	7	6	5	4	3	2	1
Parity	SSM		Data Field																			SDI		Label (352)							
			Cell Over Temp Fail	Cell Imbalance Fail	Module Charge Required	Heater Fail	Heater Fault	Over Discharge	End of Life	Continuous Bit Failure	Continuous Bit Fault	FET Over Temp	Discharge Cell Over Temp	Stack Under Voltage	Cell Under Voltage	Short Circuit	Over Current	Charge Cell Over Temp	Cell Over Voltage	Stack Over Voltage	Invalid Config			2			5			3	
1	0	0	0	0	0	0	0	0	0	0	0	0	0	0	0	0	0	1	0	0	0	0	0	0	1	0	1	0	1	1	1

Table 3.16
ARINC 429 Label 352 Example

Label 353 Configuration ID

In this example, the Configuration ID = 2184:

ARINC 429 Label 353 – Configuration ID																															
32	31	30	29	28	27	26	25	24	23	22	21	20	19	18	17	16	15	14	13	12	11	10	9	8	7	6	5	4	3	2	1
Parity	SSM		Data Field																			SDI		Label (353)							
			Padding			32768	16384	8192	4096	2048	1024	512	256	128	64	32	16	8	4	2	1			3			5			3	
0	1	1	0	0	0	0	0	0	0	1	0	0	0	1	0	0	0	1	0	0	0	0	0	1	1	0	1	0	1	1	1

Table 3.17
ARINC 429 Label 353 Example

Label 377 Equipment ID

The equipment ID is 0B3:

ARINC 429 Label 377 –Equipment ID																															
32	31	30	29	28	27	26	25	24	23	22	21	20	19	18	17	16	15	14	13	12	11	10	9	8	7	6	5	4	3	2	1
Parity	SSM		Data Field																			SDI		Label (377)							
			Padding							MSD			-				LSD							7			7			3	
										0			B				3														
0	0	0	0	0	0	0	0	0	0	0	0	0	0	1	0	1	1	0	0	1	1	0	0	1	1	1	1	1	1	1	1

Table 3.18
ARINC 429 Label 377 Example

3.2.4 Battery Protections

3.2.4.1 Protections Active

The battery has certain protections (faults) that prevent the battery from entering Sleep Mode (Protections Active). The following protections (faults) prevent the battery from entering sleep mode while they are active (Note: not all faults result in Protections Active):

- Discharge Protections
  - Short Circuit
  - Over Current
  - Discharge Cell Over Temperature
  - Discharge Electronics Over Temperature
- Charge Protections
  - Charge Cell Over Temperature
  - Charge Electronics Over Temperature

3.2.4.2 Protective Sleep

If the battery voltage falls below 16V for more than 6 minutes, the battery will transition to Sleep Mode regardless of the Protections Active status. The battery will transition to Active Mode under normal conditions, with the status of Protections Active being maintained.

3.2.5 Fault and Service Indications

The battery has built-in protection for conditions that may exceed specified operating limits. When in Active Mode, the battery presents multiple status indications and data to the aircraft for display and monitoring on appropriate systems. These are supplied as either serial, discrete, or analog signals. The various outputs and indications are provided below.

ARINC Label 352 FAULT / SERVICE Description	ARINC Label 352 Bit(1)	Battery Discrete / Status Panel Indications		Charge / Discharge Disabled	
		FAULT	SERVICE		
		Pin "K" Discrete(2)	Pin "J" Discrete(3)	ARINC Label 351 Bits 15/16 Discharge Disabled(1)(4)	ARINC Label 351 Bits 17/18 Charge Disabled(1)(5)
Invalid Configuration	11		SERVICE	X	X
Stack Overvoltage	12	FAULT			X
Cell Overvoltage	13	FAULT			X
Cell Over-temp (charging)	14	FAULT			X
Over Current	15	FAULT		X	
Short Circuit	16	FAULT		X	
Cell Undervoltage	17	FAULT		X	
Stack Undervoltage	18	FAULT		X	
Cell Over-temp (discharging)	19	FAULT		X	
FET Over-temp	20	FAULT		X	X
Continuous BIT Fault	21	FAULT		X	X
Continuous BIT Failure	22		SERVICE	X	X
End of Life	23	FAULT			
Over-Discharge	24		SERVICE	X	X
Heater Fault	25	FAULT			
Heater Fail	26		SERVICE		
Module Charge Required	27	FAULT			
Cell Imbalance	28		SERVICE	X	X
Cell Over-temp Fail	29		SERVICE	X	X

Note: Fault and Service are independently triggered. Fault and Service indications can appear simultaneously. Check ARINC label 352 for specific Fault/Fail condition.

(1) True (bit=1) when Active

(2) Pin K is grounded when Active; ARINC Label 271, bit 15 ("Fault") True when Active; On-Board Status Indicator displays yellow Fault light

(3) Pin J is grounded when Active; ARINC Label 271, bit 16 ("Service") True when Active; On-Board Status Indicator displays red Service Light

(4) ARINC Label 351, bit 15 Active when one or more modules have discharge disabled;
ARINC Label 351, bit 16 Active when all modules have discharge disabled

(5) ARINC Label 351, bit 17 Active when one or more modules have charge disabled;
ARINC Label 351, bit 18 Active when all modules have charge disabled

Table 3.19
Fault and Service Indications

3.3 CONTROL MODE

For control mode operations (e.g. software updates, custom programmable parameters and event log) refer below to Figure 3.3 and Table 3.9. If the Service Button is pressed and a valid flash drive is not inserted within one minute the battery will reboot into flight mode.

The front face of the battery has a sealed hexagonal access cover below the main power connector, secured with a single screw. When removing the cover, it reveals access to a USB Type-A port, a recessed initiation switch, and a status light. These can be used in Control Mode to update the battery software, configure its customizable parameters, and download the diagnostic data log.

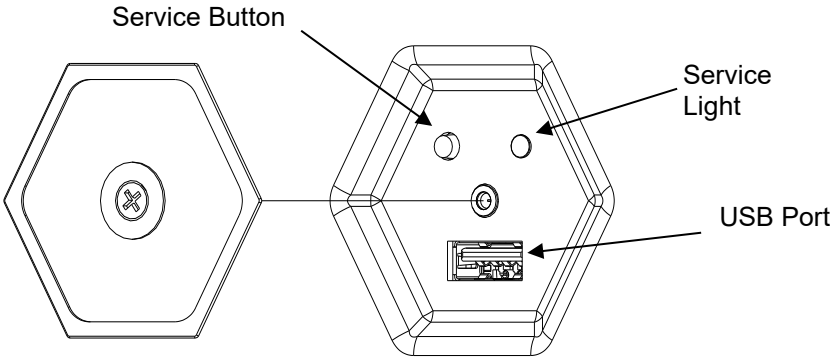

Figure 3.3
USB Service Port

Update Status	LED Status
Idle	White
Reading / Writing USB storage	Blue
Operation In Progress	Yellow
Operation Successful	Green
Operation Error	Red

Table 3.9
Control Mode Status Indicator Descriptions

For specific control mode operations, refer to the TBX (TB20, TB30, TB40, TB50 or TB60) Installation Manual for detailed instructions:

- Software update: refer to Section 5.3.1 (Installation Manual)
- Load Custom Programmable Parameters: refer to Section 5.3.2 (Installation Manual) and Section 3.3.1 below
- Verify Custom Programmable Parameters and Software Version: Refer to Section 5.3.3 (Installation Manual)
- Download event log: refer to Section 5.3.4 (Installation Manual)

3.3.1 Loading Custom Programmable Parameters

The True Blue Power Advanced Lithium-ion Battery is designed with software control that provides the ability to configure it with custom parameters specific to the aircraft. This can only be done while the battery is not in flight and is in Control Mode.

Custom configuration parameters are loaded onto the unit using a standard USB flash drive. A fixed file format and file name (up to 16 characters: _____.*cfg*) with valid data parameters is required to be loaded onto the battery. Invalid file formats or data will be rejected and not allowed to load. Contact the manufacturer to coordinate parameter and file creation for your application.

The following parameters are available for configurable customization:

- Charge Current Limit – 2 limits available for MOD 3 and later units

  Setting the charge current limit restricts the maximum current that the battery is allowed to consume from the aircraft electrical bus. Because of the very low internal impedance of the battery, it can provide extremely fast charging and discharging at high current. For some aircraft that have limited electrical power available, or to manage power consumption at a known amount, a charge current limit may be desired.
  The Charge Current Limit can also be disabled, allowing the battery to charge as quickly as possible and take up to its maximum charge current. The Charge Current Limit is set to 0 (disabled) as the initial factory default. Two different Charge Current Limits are available to be programmed (Setpoint 1 and Setpoint 2) that provides flexibility to switch between charging speeds (using communications discrete input pin P). MOD 3 (check battery nameplate) is required in order for 2 Setpoints to be utilized. Units fielded prior to MOD 3 only have the capability for a single charge current limit.

- End of Life

  Setting an End of Life capacity provides an ARINC and discrete signal to indicate when the battery is approaching, or at End of Life and in need of replacement. This is based on a comparison of the programmed value with the battery's real-time capacity measurement. End of Life capacity is determined in accordance with the specific aircraft requirements at time of the battery installation certification. This is typically the minimum capacity required to provide power to critical aircraft systems for a particular period of time in the case of primary power generation loss.
  The End of Life parameter can be set between 50-90% of the battery's original capacity in increments of 0.1 Ah. The End of Life capacity parameter and indication is not required. The End of Life capacity is not set (disabled) as the initial factory default.

- Minimum State of Charge (SOC)

  Setting a Minimum SOC value provides an ARINC and discrete signal that validates the state of charge against the aircraft's specific required minimum for emergency operations. This is typically used to verify that the battery has been charged sufficiently prior to dispatch to support an emergency mission profile.
  The Minimum SOC parameter can be set between 10-100% state of charge in increments of 1%. A Minimum SOC parameter and indication is not required to be programmed. The Minimum SOC is not set (disabled) as the initial factory default.

- Engine Start

  Setting the Engine Start parameter provides an ARINC and discrete signal that indicates that the required amount of energy and power, given the existing environmental conditions and state of the battery, is available to complete a full engine start. This indication is useful to avoid a potential 'hot start' with a turbine engine due the battery depleting before completing the start sequence. Coordinate with the manufacturer to determine the proper Engine Start parameter value based on specific engine start characteristics.
  - The first Engine Start parameter is Start Energy required. An Engine Start parameter of 0Wh bypasses evaluating the energy for an engine start.
  - The second Engine Start parameter is Engine Start Peak Current required. If the temperature of the battery is too cold to reach the programmed peak current value, the engine start ARINC Label and Discrete Signal will activate. An Engine Start Peak Current parameter of 0A bypasses evaluating the maximum current required for an engine start.

  The Engine Start parameters are not required to be programmed. The Engine Start parameter is not set (disabled) as the initial factory default.

- Minimum Energy

  Setting the Minimum Energy parameter provides a positive ARINC signal (Label 271, bit 18) if the actual minimum energy of the battery is below this value. Minimum energy, or 'Deliverable Energy', is defined as Capacity x State of Charge in amp hours (Ah). A customer can set this value to represent a required minimum for any specific purpose. A Minimum Energy parameter and indication is not required to be programmed; it is set to 0.0Ah (disabled) as the initial factory default.

3.3.2 Format for Custom Programmable Parameters

The format of the Custom Configuration Parameters file is straightforward and can be created or edited from a simple text editor (e.g. Notepad or WordPad). Below are examples of configuration files as output from each of the TBX batteries (TB20, TB30, etc.). The output files can also be modified and used as the input with new or different parameter values as needed. The # on the top lines indicate those are comments only, but are useful by providing the battery serial number, software version, battery type and installation configuration ID. Additionally, the parameter ranges for each battery type are included as an aid to help determine your programmed values. The last 6 lines are the custom programmable parameters that are currently programmed into the battery.

The configuration file name can be customized using a maximum of 16 characters with a ".cfg" file extension when loading. A file with the same file name, but a ".txt" file extension, will be produced when extracting the file. (e.g. *my_parameters.cfg* versus *my_parameters.txt*). See section 3.3.3 for more details regarding file naming, loading, and downloading.

3.3.2.1 TB20 Configuration File (from getcfg.cmd)

```
# TBX Custom Programmable Parameters File
# S/N: XX-XXXXX
# 2025-08-14 19:59:43
# Software Version = 1.2.0
# Battery Type: TB20
# Installer Configuration File ID = 14349
#
# Default value for each of the seven features below is 0.0 (feature off)
# If a parameter is configured for use, follow the rules below
#
# CHARGE_LIMIT_SETPOINT1      |range is  4.0 - 160.0    (A)    (1.0 A  increments)
# CHARGE_LIMIT_SETPOINT2      |range is  4.0 - 160.0    (A)    (1.0 A  increments
# MINIMUM_STATE_OF_CHARGE     |range is 10.0 - 100.0    (%)    (1.0 %  increments)
# MINIMUM_ENERGY              |range is  0.0 -  20.0    (Ah)   (0.1 Ah increments)
# END_OF_LIFE_CAPACITY        |range is 12.0 -  19.0    (Ah)   (0.1 Ah increments)
# START_ENERGY_REQUIRED       |range is 29.0 - 528.0    (Wh)   (1.0 Wh increments)
# START_PEAK_CURRENT          |range is 20.0 - 1000.0   (A)    (1.0 A  increments)
#
# Numeric value for entries below must be between brackets {  }
#
CHARGE_LIMIT_SETPOINT1        = { 0.0 } A
CHARGE_LIMIT_SETPOINT2        = { 0.0 } A
MINIMUM_STATE_OF_CHARGE       = { 0.0 } %
MINIMUM_ENERGY                = { 0.0 } Ah
END_OF_LIFE_CAPACITY          = { 0.0 } Ah
START_ENERGY_REQUIRED         = { 0.0 } Wh
START_PEAK_CURRENT            = { 0.0 } A
```

3.3.2.2 TB30 Configuration File (from getcfg.cmd)

```
# TBX Custom Programmable Parameters File
# S/N: XXX-XXXXX
# 2025-08-14 19:59:43
# Software Version = 1.2.0
# Battery Type: TB30
# Installer Configuration File ID = 14349
#
# Default value for each of the seven features below is 0.0 (feature off)
# If a parameter is configured for use, follow the rules below
#
# CHARGE_LIMIT_SETPOINT1      |range is  6.0 - 240.0    (A)    (1.0 A  increments)
# CHARGE_LIMIT_SETPOINT2      |range is  6.0 - 240.0    (A)    (1.0 A  increments)
# MINIMUM_STATE_OF_CHARGE     |range is 10.0 - 100.0    (%)    (1.0 %  increments)
# MINIMUM_ENERGY              |range is  0.0 -  30.0    (Ah)   (0.1 Ah increments)
# END_OF_LIFE_CAPACITY        |range is 18.0 -  28.5    (Ah)   (0.1 Ah increments)
# START_ENERGY_REQUIRED       |range is 29.0 - 792.0    (Wh)   (1.0 Wh increments)
# START_PEAK_CURRENT          |range is 30.0 - 1500.0   (A)    (1.0 A  increments)
#
# Numeric value for entries below must be between brackets {  }
#
CHARGE_LIMIT_SETPOINT1        = { 0.0 } A
CHARGE_LIMIT_SETPOINT2        = { 0.0 } A
MINIMUM_STATE_OF_CHARGE       = { 0.0 } %
MINIMUM_ENERGY                = { 0.0 } Ah
END_OF_LIFE_CAPACITY          = { 0.0 } Ah
START_ENERGY_REQUIRED         = { 0.0 } Wh
START_PEAK_CURRENT            = { 0.0 } A
```

3.3.2.3 TB40 Configuration File (from getcfg.cmd)

```
# TBX Custom Programmable Parameters File
# S/N: XXX-XXXXX
# 2025-08-14 19:59:43
# Software Version = 1.2.0
# Battery Type: TB40
# Installer Configuration File ID = 14349
#
# Default value for each of the seven features below is 0.0 (feature off)
# If a parameter is configured for use, follow the rules below
#
# CHARGE_LIMIT_SETPOINT1      |range is  8.0 - 320.0    (A)   (1.0 A  increments)
# CHARGE_LIMIT_SETPOINT2      |range is  8.0 - 320.0    (A)   (1.0 A  increments)
# MINIMUM_STATE_OF_CHARGE     |range is 10.0 - 100.0    (%)   (1.0 %  increments)
# MINIMUM_ENERGY              |range is  0.0 -  40.0    (Ah)  (0.1 Ah increments)
# END_OF_LIFE_CAPACITY        |range is 24.0 -  38.0    (Ah)  (0.1 Ah increments)
# START_ENERGY_REQUIRED       |range is 29.0 - 1056.0  (Wh)  (1.0 Wh increments)
# START_PEAK_CURRENT          |range is 40.0 - 1500.0  (A)   (1.0 A  increments)
#
# Numeric value for entries below must be between brackets {  }
#
CHARGE_LIMIT_SETPOINT1        = { 0.0 } A
CHARGE_LIMIT_SETPOINT2        = { 0.0 } A
MINIMUM_STATE_OF_CHARGE       = { 0.0 } %
MINIMUM_ENERGY                = { 0.0 } Ah
END_OF_LIFE_CAPACITY          = { 0.0 } Ah
START_ENERGY_REQUIRED         = { 0.0 } Wh
START_PEAK_CURRENT            = { 0.0 } A
```

3.3.2.4 TB50 Configuration File (from getcfg.cmd)

```
# TBX Custom Programmable Parameters File
# S/N: XXX-XXXXX
# 2025-08-14 19:59:43
# Software Version = 1.2.0
# Battery Type: TB50
# Installer Configuration File ID = 14349
#
# Default value for each of the seven features below is 0.0 (feature off)
# If a parameter is configured for use, follow the rules below
#
# CHARGE_LIMIT_SETPOINT1      |range is  6.0 - 240.0    (A)   (1.0 A  increments)
# CHARGE_LIMIT_SETPOINT2      |range is  6.0 - 240.0    (A)   (1.0 A  increments)
# MINIMUM_STATE_OF_CHARGE     |range is 10.0 - 100.0    (%)   (1.0 %  increments)
# MINIMUM_ENERGY              |range is  0.0 -  50.0    (Ah)  (0.1 Ah increments)
# END_OF_LIFE_CAPACITY        |range is 30.0 -  47.5    (Ah)  (0.1 Ah increments)
# START_ENERGY_REQUIRED       |range is 29.0 - 1320.0  (Wh)  (1.0 Wh increments)
# START_PEAK_CURRENT          |range is 50.0 - 1500.0  (A)   (1.0 A  increments)
#
# Numeric value for entries below must be between brackets {  }
#
CHARGE_LIMIT_SETPOINT1        = { 0.0 } A
CHARGE_LIMIT_SETPOINT2        = { 0.0 } A
MINIMUM_STATE_OF_CHARGE       = { 0.0 } %
MINIMUM_ENERGY                = { 0.0 } Ah
END_OF_LIFE_CAPACITY          = { 0.0 } Ah
START_ENERGY_REQUIRED         = { 0.0 } Wh
START_PEAK_CURRENT            = { 0.0 } A
```

3.3.2.5 TB60 Configuration File (from getcfg.cmd)

```
# TBX Custom Programmable Parameters File
# S/N: X20-16004
# 2025-08-14 19:59:43
# Software Version = 1.2.0
# Battery Type: TB60
# Installer Configuration File ID = 14349
#
# Default value for each of the seven features below is 0.0 (feature off)
# If a parameter is configured for use, follow the rules below
#
# CHARGE_LIMIT_SETPOINT1      |range is  12.0 - 480.0  (A)   (1.0 A  increments)
# CHARGE_LIMIT_SETPOINT2      |range is  12.0 - 480.0  (A)   (1.0 A  increments)
# MINIMUM_STATE_OF_CHARGE     |range is 10.0 - 100.0   (%)   (1.0 %  increments)
# MINIMUM_ENERGY              |range is  0.0 -  60.0   (Ah)  (0.1 Ah increments)
# END_OF_LIFE_CAPACITY        |range is 36.0 -  57.0   (Ah)  (0.1 Ah increments)
# START_ENERGY_REQUIRED       |range is 29.0 - 1584.0  (Wh)  (1.0 Wh increments)
# START_PEAK_CURRENT          |range is 60.0 - 1500.0  (A)   (1.0 A  increments)
#
# Numeric value for entries below must be between brackets {  }
#
CHARGE_LIMIT_SETPOINT1      = { 0.0 } A
CHARGE_LIMIT_SETPOINT2      = { 0.0 } A
MINIMUM_STATE_OF_CHARGE     = { 0.0 } %
MINIMUM_ENERGY              = { 0.0 } Ah
END_OF_LIFE_CAPACITY        = { 0.0 } Ah
START_ENERGY_REQUIRED       = { 0.0 } Wh
START_PEAK_CURRENT          = { 0.0 } A
```

3.3.3 Custom Programmable Parameter Example

When developing your custom configuration programmable parameters file, a unique filename (with up to 16 characters) with the file extension of ".cfg" can be created. For example, a file named "my_parameters.cfg" parameters file may look like below (TB20 config file shown):

```
# CHARGE_LIMIT_SETPOINT1      |range is  4.0 - 160.0    (A)    (1.0 A  increments)
# CHARGE_LIMIT_SETPOINT2      |range is  4.0 - 160.0    (A)    (1.0 A  increments)
# MINIMUM_STATE_OF_CHARGE     |range is 10.0 - 100.0    (%)    (1.0 %  increments)
# MINIMUM_ENERGY              |range is  0.0 -  20.0    (Ah)   (0.1 Ah increments)
# END_OF_LIFE_CAPACITY        |range is 10.0 -  18.0    (Ah)   (0.1 Ah increments)
# START_ENERGY_REQUIRED       |range is 29.0 - 528.0    (Wh)   (1.0 Wh increments)
# START_PEAK_CURRENT          |range is 20.0 - 1250.0   (A)    (1.0 A  increments)
#
# Numeric value for entries below must be between brackets {  }
#
CHARGE_LIMIT_SETPOINT1        = { 40.0 } A
CHARGE_LIMIT_SETPOINT2        = { 80.0 } A
MINIMUM_STATE_OF_CHARGE       = { 0.0 } %
MINIMUM_ENERGY                = { 5.0 } Ah
END_OF_LIFE_CAPACITY          = { 12.0 } Ah
START_ENERGY_REQUIRED         = { 0.0 } Wh
START_PEAK_CURRENT            = { 0.0 } A
```

With the above file loaded into a TB20 battery, extracting the configuration file (using getcfg.cmd), will return a file named "my_parameters.txt". (same filename as entered, but with ".txt" suffix).

```
# TBX Custom Programmable Parameters File
# S/N: XXX-XXXXX
# 2025-08-14 19:59:43
# Software Version = 1.2.0
# Battery Type: TB20
# Installer Configuration File ID = 4767
#
# Default value for each of the seven features below is 0.0 (feature off)
# If a parameter is configured for use, follow the rules below
#
# CHARGE_LIMIT_SETPOINT1      |range is  4.0 - 160.0    (A)    (1.0 A  increments)
# CHARGE_LIMIT_SETPOINT2      |range is  4.0 - 160.0    (A)    (1.0 A  increments)
# MINIMUM_STATE_OF_CHARGE     |range is 10.0 - 100.0    (%)    (1.0 %  increments)
# MINIMUM_ENERGY              |range is  0.0 -  20.0    (Ah)   (0.1 Ah increments)
# END_OF_LIFE_CAPACITY        |range is 10.0 -  18.0    (Ah)   (0.1 Ah increments)
# START_ENERGY_REQUIRED       |range is 29.0 - 528.0    (Wh)   (1.0 Wh increments)
# START_PEAK_CURRENT          |range is 20.0 - 1250.0   (A)    (1.0 A  increments)
#
# Numeric value for entries below must be between brackets {  }
#
CHARGE_LIMIT_SETPOINT1        = { 40.0 } A
CHARGE_LIMIT_SETPOINT1        = { 80.0 } A
MINIMUM_STATE_OF_CHARGE       = { 0.0 } %
MINIMUM_ENERGY                = { 5.0 } Ah
END_OF_LIFE_CAPACITY          = { 12.0 } Ah
START_ENERGY_REQUIRED         = { 0.0 } Wh
START_PEAK_CURRENT            = { 0.0 } A
```